Excellence Without Compromise

EWC® CONTROLS INC.

APPLICATION NOTE

AN 147 **FAN FAILURE SAFETY LOCK-OUT CIRCUIT**

The use of a safety lock-out circuit is highly recommended. The circuit below is effective at stopping the humidifier operation if the fan motor fails for any reason. The use of a system interlock is optional and not required for basic operation. Failure to incorporate a lock-out can result in excessive condensation inside the duct work and/or possible flood damage, if the HVAC Fan/Blower fails to operate. This solution is provided as a supplement. Flood or water damage as a result of not using this diagram is not the responsibility of EWC Controls Inc.

FAN FAILURE SAFETY LOCK-OUT CIRCUIT

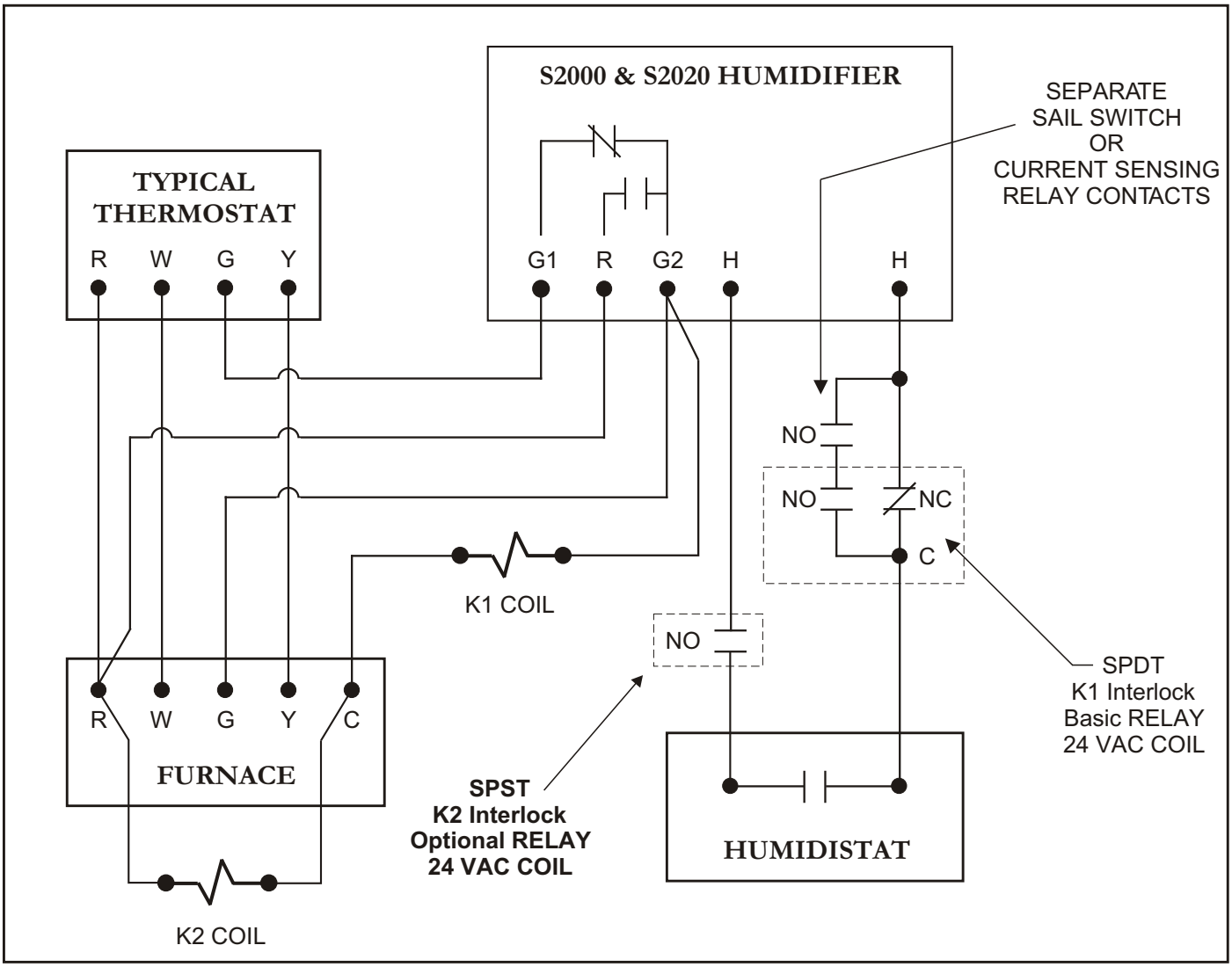

090376A0147 REV. C Copyright 2002-2006 © EWC Controls Inc. All Rights Reserved

EWC Controls Inc. ▪ 385 Highway 33 ▪ Englishtown, NJ 07726 ▪ 800-446-3110 ▪ 732-446-3110 ▪ FAX 732-446-5362